M7528 SERIES

SINGLE-OUTPUT, 1000W DC TO DC BASEPLATE COOLED POWER SUPPLY

The M7528 is a series of mechanically robust, base-plate cooled, high performance, power supplies, designed for Airborne (MIL-STD-704), Ground Mobile (MIL-STD-1275) and other Hi-Reliability applications. The M7528 converts MIL-STD-704F and MIL-STD-1275E 28V power, to a well regulated, filtered and protected DC Output.

.

Standard Models List (for other voltages – consult factory)

Part Number	Output		Power	Special features
	Voltage	Current		
M7528-101	12 V_{DC}	50 A	600W	
M7528-102	15 V_{DC}	50 A	750W	
M7528-103	24 V_{DC}	42 A	1008W	
M7528-104	28 V_{DC}	36 A	1008W	
M7528-105	48 V_{DC}	20A	960W	
M7528-106	28 V_{DC}	36A	1008W	Parallel operation via output voltage droop. Voltage regulation is ±2%.
M7528-107	48 V_{DC}	20A	960W	Parallel operation via output voltage droop. Voltage regulation is ±2%.
M7528-108	15 V_{DC}	50 A	750W	Parallel operation via output voltage droop. Voltage regulation is ±2%.

- Additional standard configurations available. **Contact factory for more details.**
- All of our products can be configured to comply with EU REACH regulations. **Contact factory for more details.**
- Rides through transients IAW MIL-STD-1275E and MIL-STD-704F**.**

THE MAIN FEATURES OF THE M7528 ARE:

- DC/DC Single outputs power supply up to 1000W
- Standard Input version IAW MIL-STD-704F
- Standard Input version IAW MIL-STD-1275E
- Rides through transients IAW MIL-STD-1275E and MIL-STD-704F
- High efficiency – up to 88% (depending on output voltage).
- Full galvanic isolation between Input, Chassis and Outputs
- External Inhibit (On/Off)
- Fixed switching freq. (250 kHz)
- EMI filters included
- Remote sense compensation
- Indefinite short circuit protection with auto-recovery
- Over-voltage protection
- Over temperature shutdown with auto-recovery
- High density
- Conduction cooled via the baseplate

SPECIFICATIONS:

DC Input	***Voltage Range***	28VDC input IAW MIL-STD-704F and MIL-STD-1275E
	Transients	Rides through transients IAW MIL-STD-1275E and MIL-STD-704F: 12V, 1sec 16V,30sec 18V Continuous 50V Continuous 100V, 50msec
	Isolation	Input to Output: 200 VDC Input to Case: 200 VDC
	Input Reverse Polarity	Protection for unlimited time
	Under-Voltage Lock-Out	Unit shuts down when input voltage falls below 10.5VDC ±1VDC **Please consult factory for more details.**
	Over-Voltage Lock-Out	Unit shuts down when input voltage rises above $104V_{DC} \pm 2V_{DC}$ **Please consult factory for more details.**
DC Output	***Rating***	See table on page 8
	Voltage Regulation	Better than or equal to ±1% (low to high line voltage, no load to full load, –55 °C to +85 °C at baseplate).
	Remote Sense	Description: Used to achieve accurate voltage regulation at load terminals, to compensate for voltage drop across the leads connecting the converter to the load, 0.25 V ± 0.1 V Use: Connect SENSE line directly to the load's positive terminal, and SENSE RTN directly to the load's negative terminal. If not used, connect SENSE to OUTPUT and SENSE RTN to OUTPUT RTN. Do not leave open!
	Ripple	Less than $50mV_{p\text{-}p}$, typical (max. 1%) without external capacitance. When connected to system capacitance ripple drops significantly.
	Isolation	Output to Case: 100 VDC

	Overvoltage Protection	• **Active Over-Voltage Protection:** The secondary control circuit takes the over if output voltage exceeds 110% ± 5% of nominal voltage. Beyond this, output voltage clamps. • **Passive Over-Voltage Protection:** Zener diode installed on output terminals, selected at 120% ± 10% of nominal voltage.
	Efficiency	For 18 to 48Vdc input with 28V/36A output: 88-89% typical For 12-100Vdc input with 28V/36A output: 85% typical
	Current Limit & Overload	Output voltage turns off and on periodically with low duty cycle (hiccup) to protect system conductors and converter from short circuit
	Over Temp. Protection	Output shuts down if base plate temperature exceeds +105°C ± 5°C. Automatic recovery when baseplate temperature returns to below +95°C ± 5°C.

Specifications (Cont.):

Control & Indication	***INHIBIT Signal***	Description: Inhibits output. Use: Apply short circuit or TTL "LOW" to turn off the power supply. Leave open or apply TTL "HIGH" to turn on the power supply. Referenced to: SIGNAL RTN
	SYNC	Description: Synchronizes internal switching frequency to system clock. Use: Apply TTL level, 250 kHz ± 10 kHz, 50% duty-cycle clock. Leave open if unused. In this case, the switching frequency will be set by the internal clock (250 kHz) Referenced to: SIGNAL RTN
	SIGNAL RTN	Description: Signals return reference. Referenced to: Connected by a 100 Ω resistor to INPUT RTN
	POR Optional	Description: The **POR** signal disables the input under voltage lockout, input over voltage lockout, over temperature protection and peak load duration limiter. **Please consult factory for details**.
Environment Designed to meet MIL-STD-810F	***Temperature***	Methods 501.4 & 502.4 Operating: –55 °C to +85 °C (at baseplate) Storage: –55 °C to +125 °C (ambient)
	Humidity	Method 507.4 Up to 95% RH
	Salt-fog	Method 509.4
	Altitude	Method 500.4 Procedures I – Storage/Air transport: up to 70,000 ft. (non-operational) Procedure II – Operation/Air Carriage: up to 70,000 ft. (operational)
	Mechanical Shock	Method 516.5 Procedure I 30 g / 11 ms terminal peak saw-tooth
	Vibration	Method 514.5 Category 4 - General minimum integrity exposure IAW Figure 514.5C-17 1 hour per axis.
	Fungus	Does not support fungus growth, in accordance with the guidelines of MIL-STD-454, Requirement 4.

EMI	***MIL-STD-461F***	Designed to meets* MIL-STD-461F CE101, CE102, CS101, CS114, CS115, CS116, RE101, RE102, RS101, RS103 *EMI Compliance achieved with 5µH LISN, shielded harness and static resistive load.
Reliability	150,000 hours, calculated per MIL-HDBK-217F Notice 2 at +85 °C baseplate, Ground Fix conditions.	
Cooling Requirements	The M7528 is a baseplate cooled unit. The base of the M7528 should be thermally attached to a suitable heatsink that maintains it below +85 °C.	
Form factor	4.76'' wide, 1.29'' high and 6.40'' deep. For detailed dimensions and tolerances see Drawing: TBD.	
Weight	Approx. 1100 g.	
Connectors	**Input connector -** J1 Connector type: M24308/24-40F or eq **Mates with:** M24308/2-4F or eq. **Output connector –** J2 Connector type: M24308/23-39F or eq **Mates with:** M24308/4-3F or eq.	

Vin 28V

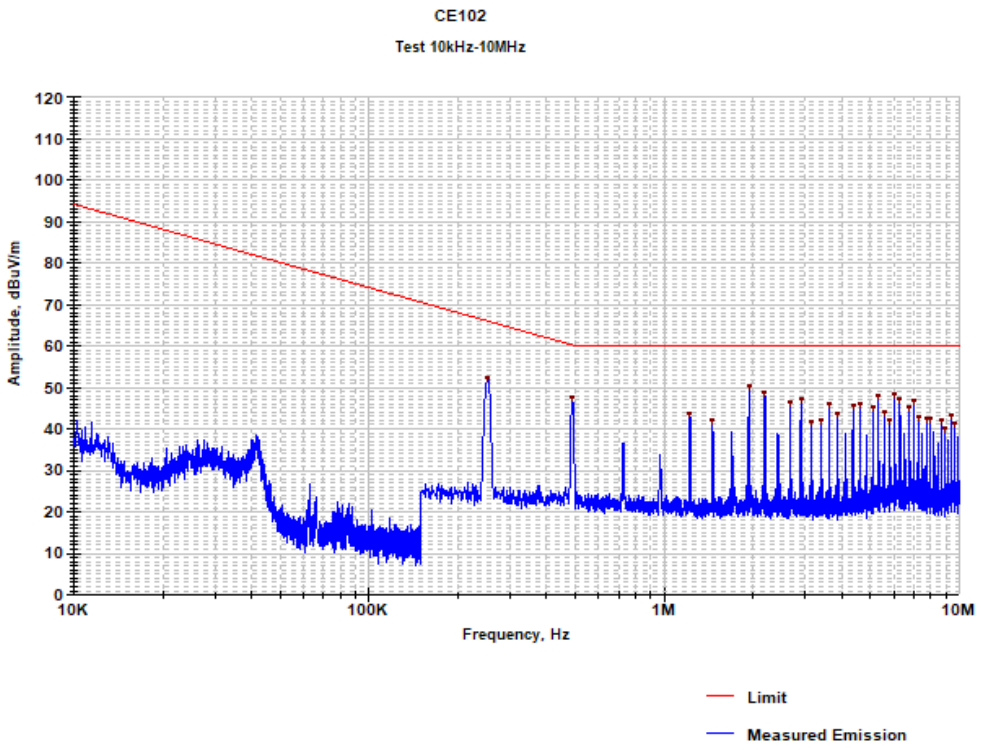

Frequency (MHz)	Measured Emission (dBuV/m)	Limit (dBuV/m)	Delta (dB)
1.938	50.1	60.0	-9.9
2.191	48.7	60.0	-11.3
5.323	48.0	60.0	-12.0
6.041	48.2	60.0	-11.8

Vin 28V RTN

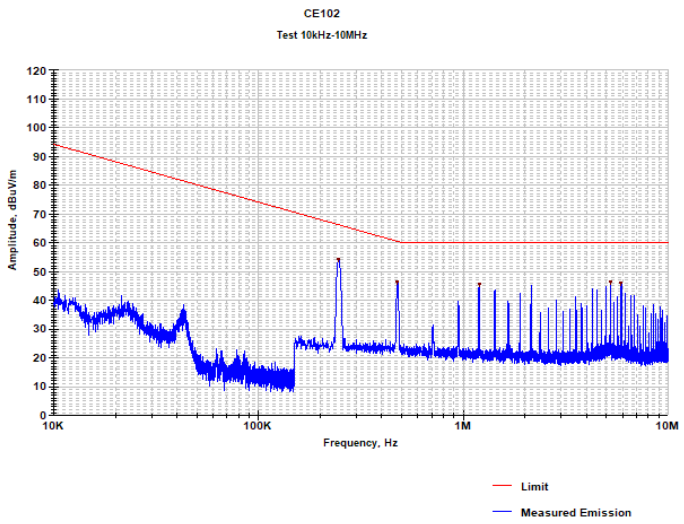

Frequency (MHz)	Measured Emission (dBuV/m)	Limit (dBuV/m)	Delta (dB)
0.247	54.0	66.1	-12.2
0.477	46.2	60.4	-14.2
1.195	45.3	60.0	-14.7
5.207	46.3	60.0	-13.7
5.904	45.9	60.0	-14.1

RE 102

2-30 MHz

TEST

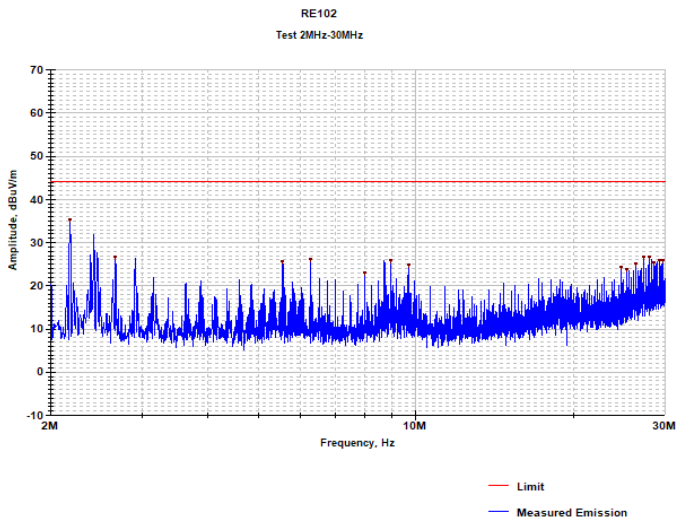

Frequency (MHz)	Measured Emission (dBuV/m)	Limit (dBuV/m)	Delta (dB)
2.179	35.2	44.0	-8.8
2.661	26.5	44.0	-17.5
5.562	25.6	44.0	-18.4
6.290	26.1	44.0	-17.9
7.981	23.1	44.0	-20.9
8.944	25.8	44.0	-18.2
9.672	24.8	44.0	-19.2
24.652	24.3	44.0	-19.7

25.374	23.6	44.0	-20.4
26.343	24.9	44.0	-19.1
27.306	26.5	44.0	-17.5
28.034	26.7	44.0	-17.3
28.516	25.4	44.0	-18.6
29.238	25.7	44.0	-18.3
29.720	25.8	44.0	-18.2

30-200MHz

Test horizontal

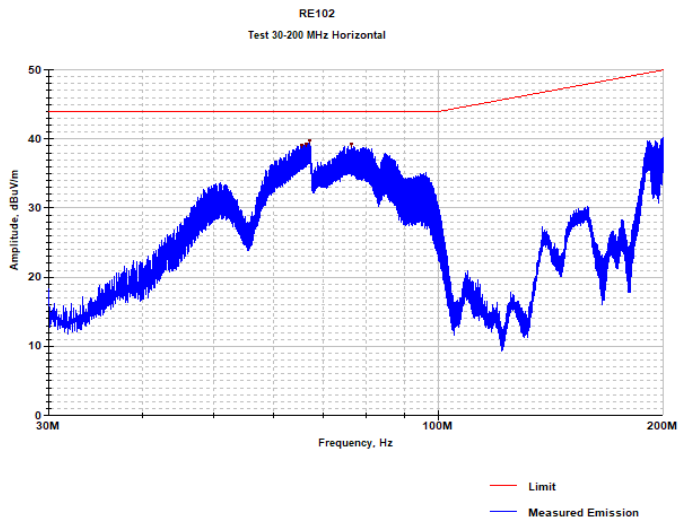

Frequency (MHz)	Measured Emission (dBuV/m)	Limit (dBuV/m)	Delta (dB)
65.462	39.1	44.0	-4.9
66.414	39.3	44.0	-4.7

67.128	39.7	44.0	-4.3
76.291	39.3	44.0	-4.7

Test vertical

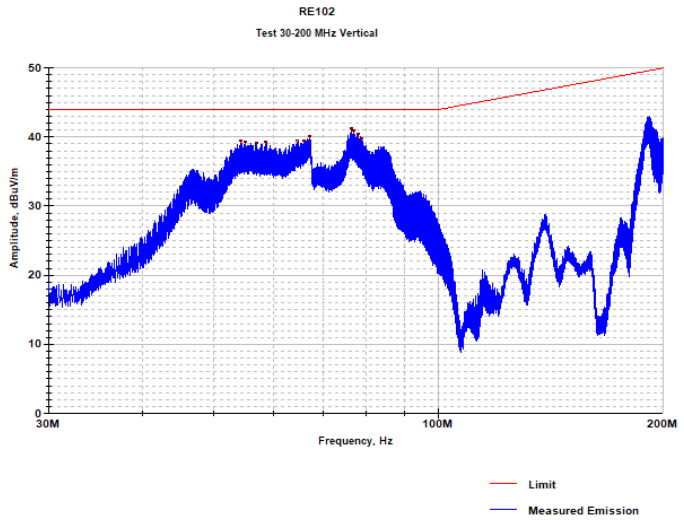

Frequency (MHz)	Measured Emission (dBuV/m)	Limit (dBuV/m)	Delta (dB)
65.462	39.1	44.0	-4.9
66.414	39.3	44.0	-4.7
67.128	39.7	44.0	-4.3
76.291	39.3	44.0	-4.7

200MHz-1000MHz

Test horizontal

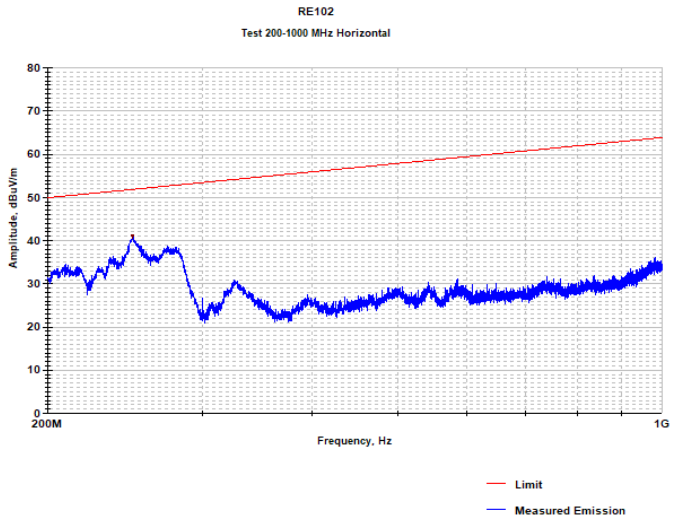

Frequency (MHz)	Measured Emission (dBuV/m)	Limit (dBuV/m)	Delta (dB)
249.760	41.13	51.93	-10.80

Test vertical

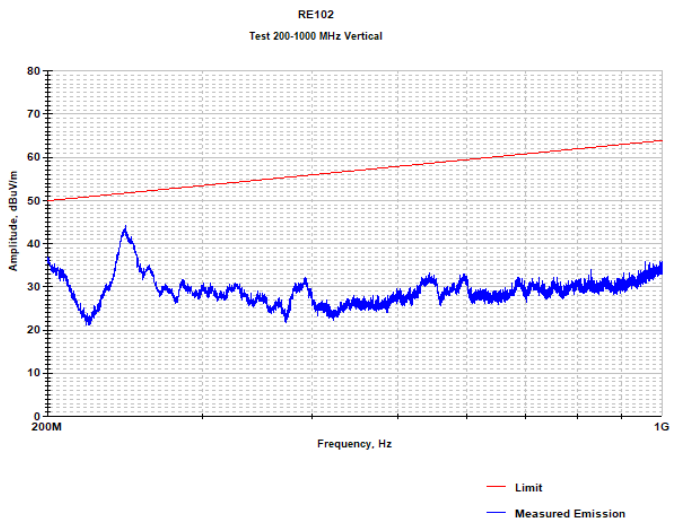

Frequency (MHz)	Measured Emission (dBuV/m)	Limit (dBuV/m)	Delta (dB)
245.280	44.07	51.78	-7.71

1000MHz-18GHz

Test horizontal

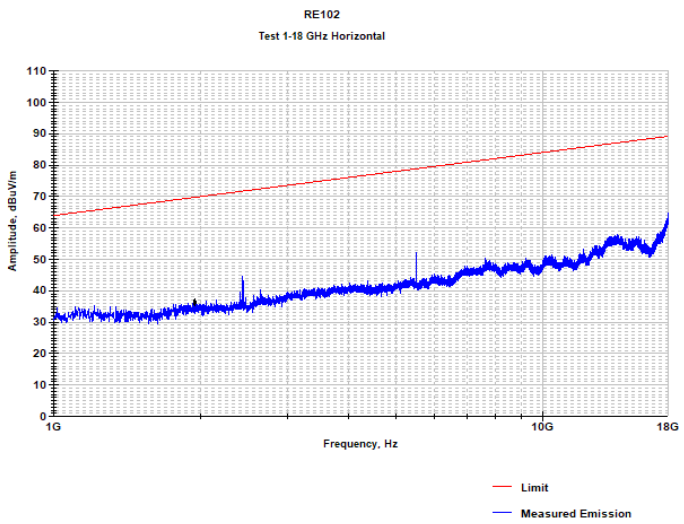

Test vertical

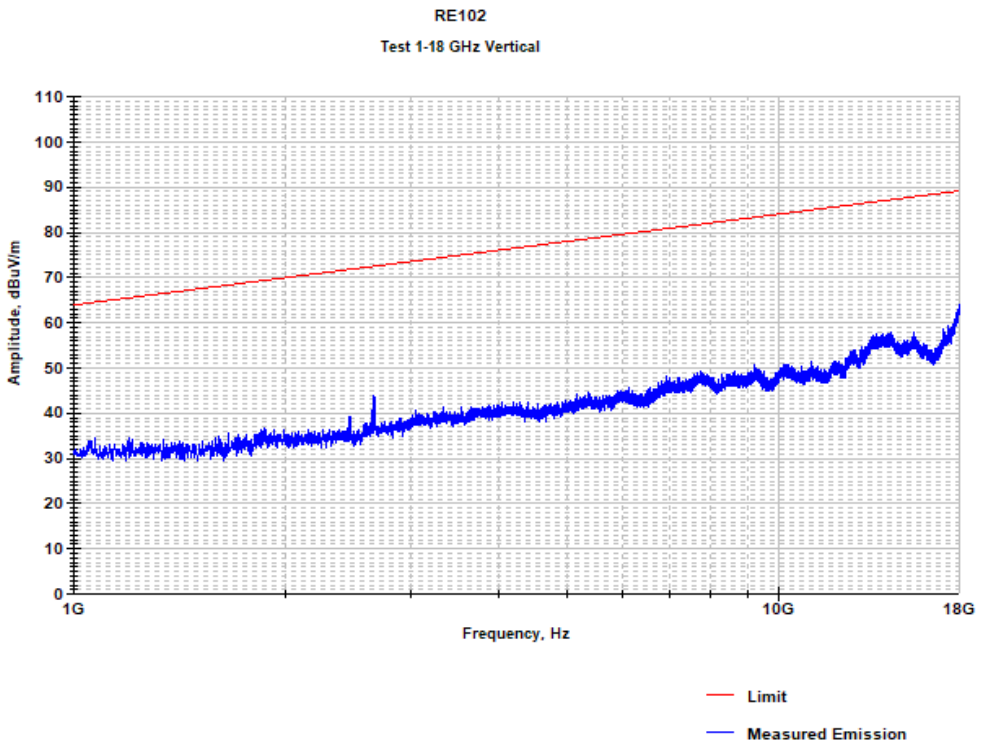

Efficiency Test for M7528 for 704 Input to 28V Output Version

Temp=+25º

$V_{IN=}$ 18Vdc / Pout (w)	η (%)
600	88.25
800	87.46
1080	86.68

$V_{IN=}$ 22Vdc / Pout (w)	η (%)
600	89.37
800	89.11
1080	88.34

$V_{IN=}$ 28Vdc / Pout (w)	η (%)
600	89.61
800	89.52
1080	89.39

$V_{IN=}$ 40Vdc / Pout (w)	η (%)
600	89.14
800	89.43
1080	89.07

Temp=-55º

$V_{IN=}$ 18Vdc / Pout (w)	η (%)
600	88.98
800	88.73
1080	87.81

$V_{IN=}$ 22Vdc / Pout (w)	η (%)
600	89.63
800	89.57
1080	89.01

$V_{IN=}$ 28Vdc / Pout (w)	η (%)
600	89.72
800	89.10
1080	89.46

$V_{IN=}$ 40Vdc / Pout (w)	η (%)
600	88.96
800	89.37
1080	89.25

Temp=+85º

$V_{IN=}$ 18Vdc / Pout (w)	η (%)
600	87.20
800	86.31
1080	85.03

$V_{IN=}$ 22Vdc / Pout (w)	η (%)
600	88.71
800	88.60
1080	87.73

$V_{IN=}$ 28Vdc / Pout (w)	η (%)
600	89.32
800	89.36
1080	88.84

$V_{IN=}$ 40Vdc / Pout (w)	η (%)
600	88.07
800	88.47
1080	88.25

TYPICAL CONNECTION DIAGRAM

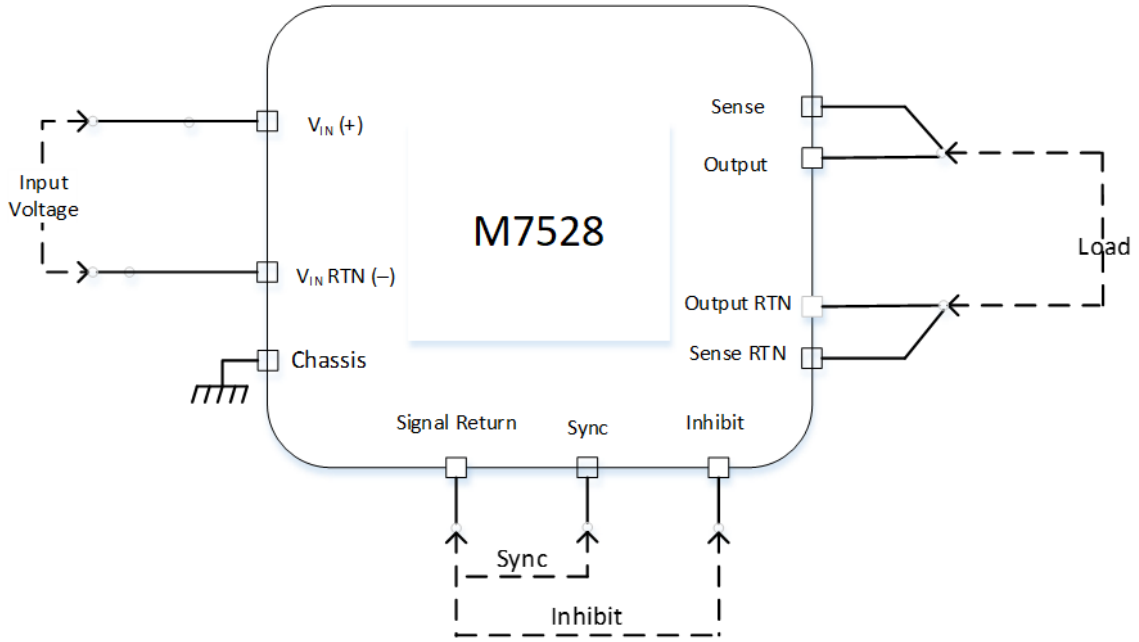

PARALLEL CONNECTION DIAGRAM

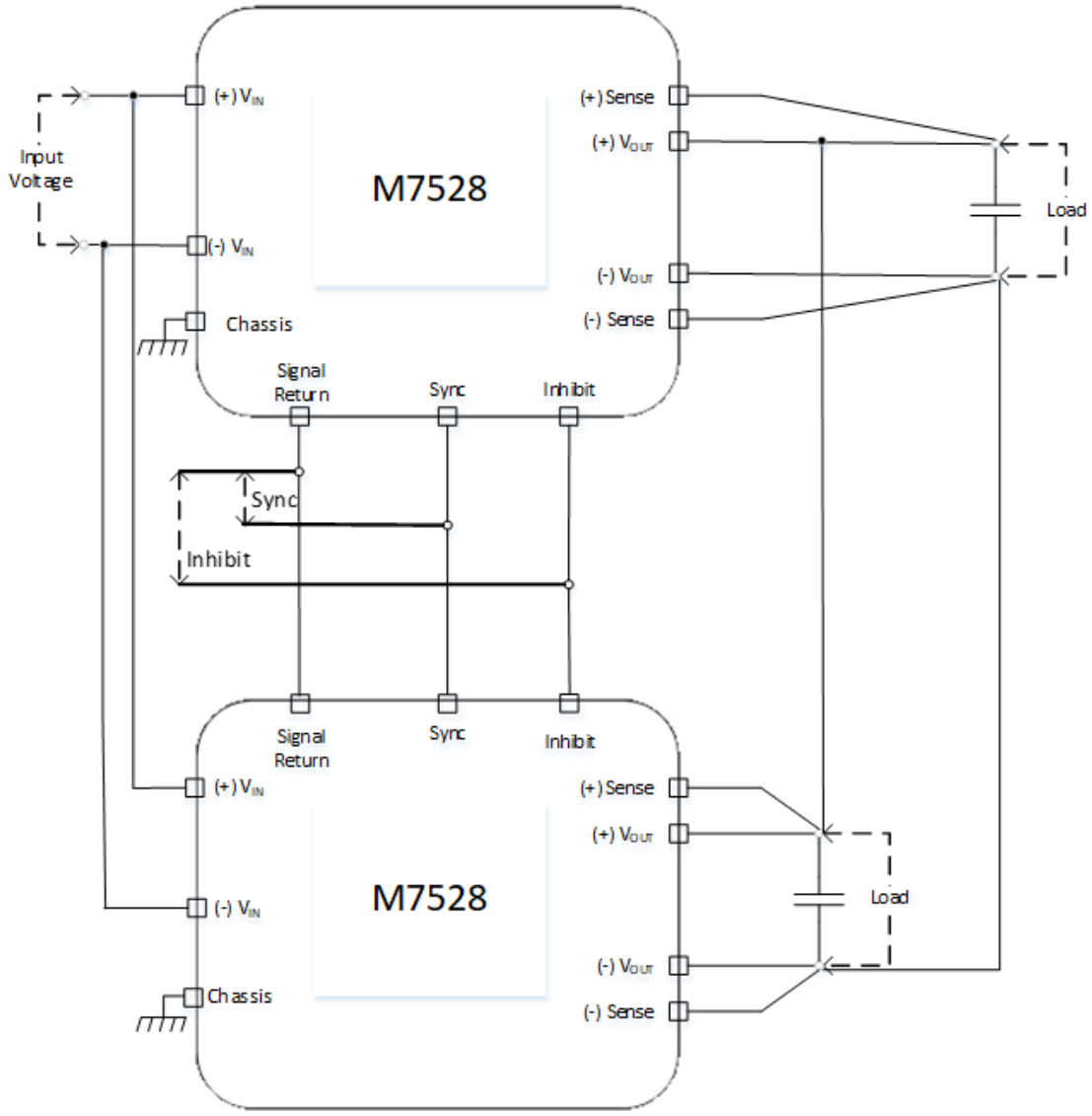

Note: Parallel operation via output voltage droop. Voltage regulation is ±2%.

PIN ASSIGNMENT:

Input connector - J1 Connector type: M24308/24-40F or eq

Mates with: M24308/2-4F or eq.

Pin No.	Function	P	Pin No.	Function	P	Pin No.	Function	P
1	INPUT	+	14	INPUT RTN	–	27	INPUT	+
2	INPUT	+	15	INPUT RTN	–	28	INPUT RTN	–
3	INPUT	+	16	INPUT RTN	–	29	INPUT RTN	–
4	INPUT	+	17	N.C.		30	INPUT RTN	–
5	INPUT	+	18	INHIBIT	+	31	INPUT RTN	–
6	INPUT	+	19	SYNC	+	32	INPUT RTN	–
7	INPUT	+	20	INPUT	+	33	INPUT RTN	–
8	INPUT	+	21	INPUT	+	34	INPUT RTN	–
9	INPUT RTN	–	22	INPUT	+	35	INPUT RTN	–
10	INPUT RTN	–	23	INPUT	+	36	CHASSIS	
11	INPUT RTN	–	24	INPUT	+	37	SIGNAL RTN	–
12	INPUT RTN	–	25	INPUT	+			
13	INPUT RTN	–	26	INPUT	+			

Output connector – J2 Connector type: M24308/23-39F or eq.

Mates with: M24308/4-3F or eq.

Pin No.	Function	P	Pin No.	Function	P	Pin No.	Function	P
1	SENSE	+	10	OUTPUT RTN	–	19	OUTPUT	+
2	OUTPUT	+	11	OUTPUT RTN	–	20	OUTPUT RTN	–
3	OUTPUT	+	12	OUTPUT RTN	–	21	OUTPUT RTN	–
4	OUTPUT	+	13	SENSE RTN	–	22	OUTPUT RTN	–
5	OUTPUT	+	14	OUTPUT	+	23	OUTPUT RTN	–
6	OUTPUT	+	15	OUTPUT	+	24	OUTPUT RTN	–
7	N.C.		16	OUTPUT	+	25	OUTPUT RTN	–
8	OUTPUT RTN	–	17	OUTPUT	+			
9	OUTPUT RTN	–	18	OUTPUT	+			

Note: All pins with identical function/designation should be connected together for optimal performance.

OUTLINE DRAWING:

For detailed dimensions and tolerances see Drawing: M7528001

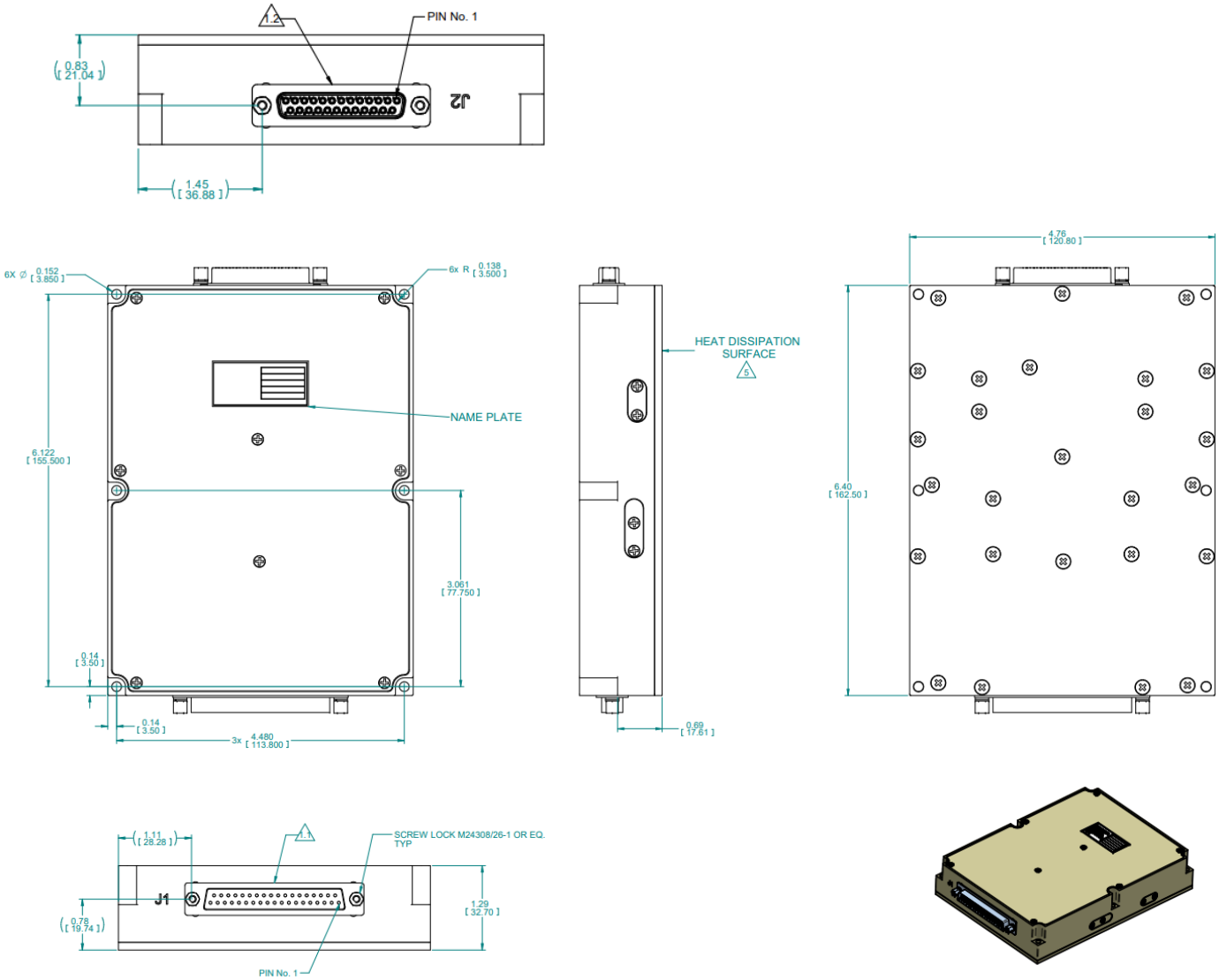

NOTES :

1. CONNECTORS:
   1.1 - INPUT PLUG D-TYPE CONN. 37P, P/N: M24308/24-40F OR EQ.
   1.2 - OUTPUT SOCKET D-TYPE CONN. 25P, P/N: M24308/23-39F OR EQ.
2. WORKMANSHIP SHALL BE MIL-STD-454, REQT. 9
3. MTL. AL 6061-T651& AL 5052-H32
4. CHROMATE CONVERSION COATING PER MIL -DTL-5541F, TYPE 1 CLASS 1A
5. HEAT DISSIPATION SURFACE: 30.43 in² [19,630 mm²]
6. ENGRAVING: CHARACTERS HEIGHT: 0.157in [4mm) DEPTH: 0.157in [4mm).
7. FILL ENGRAVING WITH BLACK LUSTERLESS EPOXY PAINT COLOR PER FED-STD 595 N0 : 37038.

DIMENSIONS ARE IN INCH [MM]
DO NOT SCALE DRAWING

GENERAL TOLERANCES
X.XX ± .02 [0.50]
X.XXX ±.006 [0.15]
ANGLES ± 1°

Note: Specifications are subject to change without prior notice by the manufacturer.