FIELD-PROVEN COTS, MOTS AND CUSTOM MILITARY POWER SOLUTIONS

M6211 SERIES

DC/DC POWER SUPPLY

PRODUCT HIGHLIGHTS

- MINIATURE
- HIGH DENSITY
- HIGH EFFICIENCY
- SINGLE OUTPUT
- DC/DC POWER SUPPLY
- UP TO 200 W

AS9100D CERTIFIED ISO 9001

NIST 800-171 Compliant

Milpower Source, Inc. • Belmont, NH, USA • P: (603) 267-8865 • sales@milpower.com • www.milpower.com
SBA Certified Small Business • **CAGE:** 0B7R6 • **NAICS:** 335999, 334513, 334413, 334416, 334511, 335314, 336419, 336413

Applications

Military (ground-fix, shipboard), Ruggedized, Telecom, Industrial

Special Features

- Miniature size
- High efficiency
- Wide input range
- Input / Output isolation
- Remote Inhibit (on/off)
- ZVS Technology
- Fixed switching freq. (250 kHz)
- External sync. capability
- EMI filters included
- Remote sense compensation
- Non-latching protections:
  - Load current limiting
  - Output overvoltage & short
  - Over temperature shutdown

Electrical Specifications

DC Input

Voltage range: 18 to 48 V_{DC}

Abnormal transient protection (no damage) IAW MIL-STD-1275A (100 V / 50 ms) and MIL-STD-704A (80 V / 0.1 Sec)

DC Output

Voltage range: 1.5 to 28 V_{DC}
Current: 0 to 40 A
Power: 0 to 200 W

Isolation

Input to output: 200 V_{DC}
Input to case: 200 V_{DC}
Output to case: 100 V_{DC}

Output Voltage Regulation

Less than ±1% (no load to full load, –55 °C to +85 °C).

Efficiency

90 to 92% typical
(12 V_{DC} output, half to full load, room temperature)

EMC

Designed to meet* MIL-STD-461F CE101, CE102, CS101, CS114, CS115, CS116, RE101, RE102, RS101, RS103

Ripple and Noise:

Less than 50mV_{p-p}, typical (max. 1%) without external capacitance. When connected to system capacitance ripple drops significantly.

Step Load Over-and-undershoot

Output resistance at load change of 50%-100% is 30-200 mΩ (depending on output voltage). Output resumes steady-state within 300-500 µs.

Turn-On Transient

No output overshoot during power on.

* Compliance achieved with 5µH LISN, shielded harness and static resistive load.
If LISNs are required, use 5 µH type only. 50 µH type LISNs may induce oscillation in the converter.

*Protections **

Input

- **Under Voltage Lock-Out**
  Unit shuts down below $16.5V_{DC} \pm 1V_{DC}$
- **Over Voltage Lock-Out**
  Unit shuts down above $52V_{DC} \pm 2V_{DC}$

Output

- **Active Over Voltage Protection**
  Internal control protects unit and load (no damage) if output exceeds nominal voltage by 10% ± 5% due to internal failure.
- **Passive Over Voltage Protection**
  Transorb across output selected at 20% ± 10% above nominal voltage.
- **Current Limiting**
  Continuous protection (10-30% above maximum current) for unlimited time (Hiccup).

General

- **Over Temperature Protection:**
  Output shuts down if base plate temperature exceeds +105°C ± 5°C.
  Output recovers automatically when base plate temperature returns to below +95°C ± 5°C.

* Thresholds and protections can be modified / removed – please consult factory.

Environmental Conditions

Design to meet MIL-STD-810F

Temperature

Operating: –55 °C to +85 °C
(measured at baseplate)
Storage: –55 °C to +125 °C

Altitude

Method 500.4
Procedures I & II
0 to 70,000 ft. AMSL

Salt Fog

Method 509.4

Humidity

Method 507.4
Up to 95% RH.

Vibration

Method 514.5
Category 24
General minimum integrity exposure IAW Figure 514.5C-17, 1 hour per axis.

Shock

Method 516.5
Procedure I
Saw-tooth, 20 g peak, 11 ms

* All environmental requirements can be tailored per customer needs– please consult factory.

Reliability

150,000 hours, calculated IAW MIL-HDBK-217F Notice 2 at +85 °C baseplate, Ground Fix conditions.

Environmental Stress Screening (ESS)

Including random vibration and thermal cycles is also available. Please consult factory for details.

Pin Assignment

Connector type: M24308/24-75F or eq.

Mates with: M24308/2-13F or eq.

Pin #	Function	P	
1	OUTPUT RTN	–	●
2	OUTPUT RTN	–	●
3	OUTPUT RTN	–	●
4	OUTPUT RTN	–	●
5	OUTPUT	+	●
6	OUTPUT	+	●
7	OUTPUT	+	●
8	OUTPUT	+	●
9	SENSE RTN	–	⊘
10	N.C.		
11	INHIBIT	+	●
12	INPUT	+	●
13	INPUT	+	●
14	INPUT RTN	–	●
15	INPUT RTN	–	●

Pin #	Function	P	
16	OUTPUT RTN	–	●
17	OUTPUT RTN	–	●
18	OUTPUT RTN	–	●
19	OUTPUT RTN	–	●
20	OUTPUT RTN	–	●
21	OUTPUT	+	●
22	OUTPUT	+	●
23	OUTPUT	+	●
24	OUTPUT	+	●
25	SENSE	+	⊘
26	SIGNAL RTN	–	●
27	SYNC	+	●
28	INPUT	+	●
29	INPUT RTN	–	●
30	INPUT RTN	–	●

Pin #	Function	P	
31	OUTPUT RTN	–	●
32	OUTPUT RTN	–	●
33	OUTPUT RTN	–	●
34	OUTPUT RTN	–	●
35	OUTPUT	+	●
36	OUTPUT	+	●
37	OUTPUT	+	●
38	OUTPUT	+	●
39	OUTPUT	+	●
40	N.C.		
41	INPUT	+	●
42	INPUT	+	●
43	INPUT RTN	–	●
44	CHASSIS		●

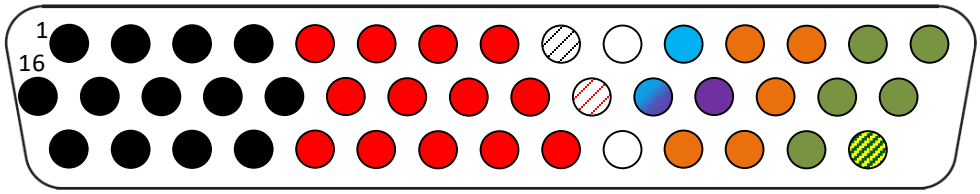

Note: All identically designated pins should be connected together for optimal performance.

Functions and Signals

INHIBIT (pin 11)
Direction: Input
Signal type: 5V TTL or OPEN/SHORT.
Return line: ***SIGNAL RTN*** (pin 26)
Description: The ***INHIBIT*** signal is used to turn the power supply ON or OFF.
Applying logic "1" or leaving pin open will turn the power supply on.
Applying logic "0" or shorting the pin to its return line will turn the power supply off.
If this signal is not required, leave pin unconnected.

SYNC (pin 27)
Direction: Input
Signal type: 5V TTL.
Return line: ***SIGNAL RTN*** (pin 26)
Description: The ***SYNC*** signal is used to allow the power supply internal clock frequency to synchronize with an external user clock.
Valid external clock frequency range is 250 ± 10 kHz.
Valid external clock duty-cycle is 50% ± 10%.
If left unconnected, the power supply will operate from internal clock, set at 250 ± 10 kHz.

SIGNAL RTN (pin 26)
Description: Return line for ***INHIBIT*** (pin 11) and ***SYNC*** (pin 27) signals.
This pin is referenced to the ***INPUT RTN*** (pins 14, 15, 29, 30 and 43).

SENSE (pin 25) and **SENSE RTN** (pin 9)
Direction: Output
Description: The remote sense compensation function is used to achieve accurate load regulation at the load terminals. This is done by measuring the voltage at the load terminals and setting the output voltage to higher than nominal, in order to compensate for the voltage dropped across the output harness.
The use of this function is limited to between 2 to 10% of nominal voltage, depending on output voltage.
If this function is not required, connect ***SENSE*** directly to ***OUTPUT*** (pins 5-8, 21-24 and 35-39) and ***SENSE RTN*** directly to ***OUTPUT RTN*** (pins 1-4, 16-20 and 31-34)

Typical Connection Diagram

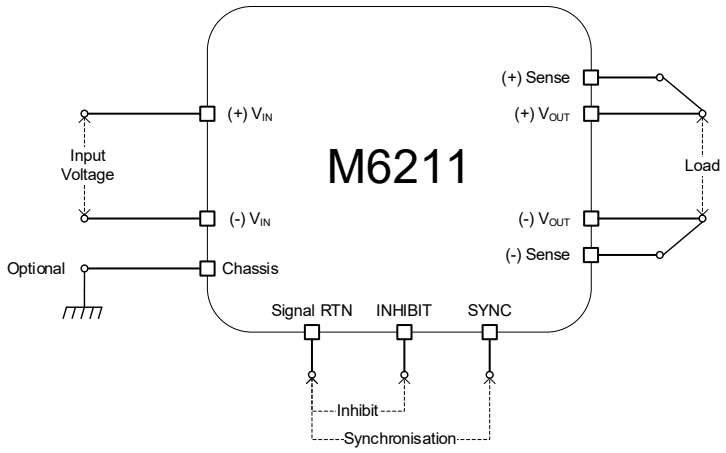

Outline Drawing

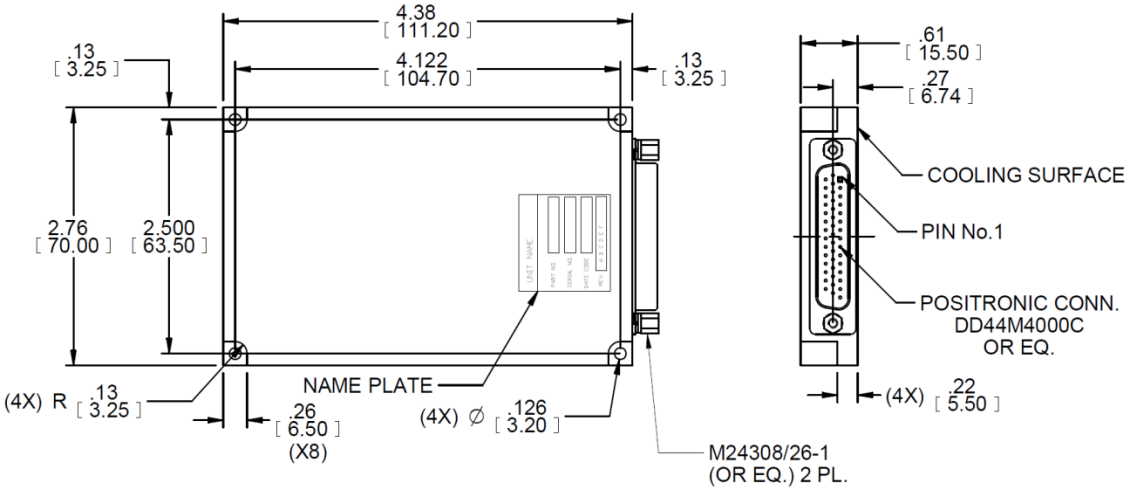

Heat Dissipation Surface

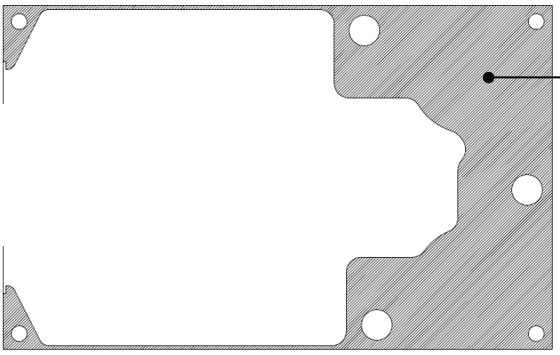

Heat Dissipation Surface Area
3.73 in²
[2404 mm²]

Notes

1. Dimensions are in inches [mm]
2. Tolerance is:
   .XX ± 0.01 in
   .XXX ± 0.005 in
3. Weight: Approx.200 g [7.05 oz]

Note: Specifications are subject to change without prior notice by the manufacturer